CERN LIBRARIES, GENEVA

CM-P00064510

CLIC Note 108

Computer Design of Iris Coupled Radio Frequency Structures

H. Henke and W. Wuensch

22 February 1990

1 Introduction

The design of iris coupled accelerating structures has always been a difficult task for radio frequency engineers. The coupling iris must have appropriate dimension to provide a good match between the feeding waveguide and the accelerating structure, typically with a VSWR of better than 1.05.

Since the coupling problem has eluded direct analytic solution the techniques which have been used to produce a matched coupling have been filing and bending the iris, or relatively crude analytical estimates like Bethe's small hole approximation applied to an iris with typical dimensions of half a wavelength. The problem of field asymmetries has been overcome by arranging couplers with their irises placed diametrically opposite each other either in one cell or in successive sections, or by offsetting the coupling cells. Each of these solutions has its own problems and all are not entirely satisfactory.

Today, three dimensional computer codes such as MAFIA [1] are available which calculate all parameters related to the solution of closed cavity systems. However, the application of codes to problems such as the iris coupled accelerating structure with its open boundary conditions is not straight forward. MAFIA has been used to calculate the field asymmetry due to a given coupling iris [2] and to determine the necessary dimensions of the coupling iris[3]. Here we propose still another way to determine coupling iris dimensions which probably yields more precise results and requires very few computer runs. Similar to the technique described in ref. [3] our method is based on the numeric calculation of two coupled resonators with identical uncoupled resonant frequencies. The coupling of the two resonators results in a pair of modes with different frequencies and by means of equivalent circuits, a condition is derived for the value of frequency split which assures a matched waveguide to cavity transition.

2 Help from Coupled Cavities

In an iris coupled pillbox cavity arrangement, as shown in figure 1, the closed boundary requirement necessary for computer eigenmode analysis can be satisfied by introducing an ideal boundary in the waveguide. This boundary, a short for this calculation, creates a resonant cavity in the waveguide. If the distance of the short from the coupling iris is chosen to be one half a waveguide wavelength of the pillbox resonant frequency, then the two cavities will have identical uncoupled resonant frequencies . However, as calculated by Bethe in ref (4), the two cavities coupled together through the iris will have two resonances, ω^+ and ω^-, determined by the coupling constant k through the relation,

$$k = \frac{M}{\sqrt{L_g L_c}} = \frac{\omega_0^2}{2}\frac{\omega_+^2 - \omega_-^2}{\omega_+^2\omega_-^2} \approx \frac{\omega_+ - \omega_-}{\omega_0} \tag{1}$$

for $k << 1$.

The essence of the technique described here is the explicit relation of the value of k, which can be directly determined by running MAFIA, to the input match of the iris coupled cavity. This relation is found using the following lumped circuit element analysis.

The circuit description of the complete coupled cavity system is shown in figure 2a. At resonance $\omega = \omega_0$ the impedance of the cavity seen at the coupling port follows from fig. 2b, and is given by,

$$Z_c = \frac{(\omega_0 M)^2}{R_c} + i\omega_0 L_g \tag{2}$$

In order to couple the waveguide and cavity together so that they are matched on resonance, it is necessary that the real part of the cavity impedance in equation (2) is equal to the waveguide line impedance Z_L . This fixes the coupling M such that,

$$\frac{(\omega_0 M)^2}{R_c} = Z_L \tag{3}$$

The impedance of the short circuited waveguide, seen from the same point but looking in the other direction, is (Fig. 2b),

$$Z_g = Z_L tanh(\alpha_g + i\beta_g)\ell_g \tag{4}$$

On resonance, $\omega = \omega_0$, and for $\ell_g = \frac{\lambda_g}{2}$ this becomes

$$Z_g = R_g = Z_L tanh\alpha_g \ell_g \tag{5}$$

In a short metallic waveguide $\alpha\ell << 1$ equation 5 can be further reduced to

$$R_g = \frac{1}{2}\alpha_g \lambda_g Z_L \tag{6}$$

Substituting equations 3 and 6 into equation 1 and rearranging terms one finds,

$$k = (\frac{1}{2}\lambda_g \alpha_g Q_g Q_c)^{-\frac{1}{2}} \tag{7}$$

where,

$$
\begin{aligned}
Q &= \omega_0 L/R \\
\lambda_g &= \lambda_0(1-(\tfrac{\lambda_0}{2a})^2)^{-\frac{1}{2}} \\
\alpha_g &= (1+2\tfrac{b}{a}(\tfrac{\lambda_0}{2a})^2)\lambda_g/(\kappa\delta Z_0\lambda_0 b) \text{ for } TE_{10} \text{ mode} \\
\kappa &= \text{conductivity} \\
\delta &= \text{skin depth} \\
Z_0 &= \text{free space impedance}
\end{aligned}
$$

A value for k is thus simply determined by the value of the attenuation in the waveguide and by the Q values of the pillbox and the waveguide resonator. It is only necessary to run MAFIA and vary the iris dimensions until the correct value of k is observed. It is usefull to note, however, that k should be related to the iris width by some power law, which can be fit to calculated values. It is thus possible to extrapolate to the correct iris dimensions with only a few computer runs.

Although we have thus far only referred to the coupling to RF cavities, this method is also valid for travelling wave structures. By replacing the cavity resistance R with the characteristic impedance of the travelling wave structure,

$$Z_c = kQ_0R\sqrt{\frac{1-cos\phi}{1+cos\phi}} \tag{8}$$

one finds that it is simply necessary to replace the cavity Q value by the "Q" of the waveguide,

$$Q_{TW} = \frac{1}{B}\sqrt{\frac{1+cos\phi}{1-cos\phi}} \tag{9}$$

where,

$$
\begin{aligned}
\phi &= \text{phase advance per cell} \\
Q_0 &= \text{Q of a single cell} \\
\text{B} &= \text{relative bandwidth of the structure}
\end{aligned} \tag{10}
$$

It is important this matching technique not be too sensitive to errors in the waveguide impedance. From equations 1, 2, and 6 we find,

$$ReZ_c = \frac{(\omega_0 M)^2}{R_c} = \frac{1}{2}\alpha_g\lambda_g Q_g Q_c k^2 Z_L \tag{11}$$

Comparing equations 7 and 9 we see that the errors introduced in k are cancelled to first order leaving an error in Z_L of δ_{ZL}. Thus for a slight mismatch,

$$ReZ_c = Z_L(1+\delta_{ZL}) \tag{12}$$

one finds a VSWR in the waveguide of

$$\sigma = \frac{ReZ_c}{Z_L} = 1+\delta_{ZL} \tag{13}$$

It is possible to determine Z_L to within a few percent and consequently the achievable VSWR of the waveguide cavity transition will be small.

3 Experimental Verification

In order to test the validity of this technique a full experiment to predict and measure the coupling of WR-28 waveguide through an iris to a 30 GHz pillbox cavity has been carried out. Figure 1 shows the geometry of the coupling system under study. In this case the short in the waveguide has been placed one full waveguide wavelength, 14.1 mm at 30 GHz, rather than half a wavelength from the iris in order to simplify construction of the actual test piece. It is important to realize that placing the short at such a distance changes the necessary value of k to

$$k = (\alpha_g \lambda_g Q_g Q_c)^{-\frac{1}{2}} \tag{14}$$

The test piece is made from copper and includes a removeable endwall corresponding to the short in the calculation. This allows one to measure the coupling of the waveguide to the cavity through a reflection measurement with the endwall removed, and subsequently the frequency split of the coupled cells with the endwall in place (a highly undercoupled E-field probe in each cavity allows the frequency split measurement).

The first step in the experiment was to use MAFIA to calculate the pillbox and waveguide cavity Q's. These values, along with an analytically derived value of α_g result in a value of k = 6.23×10^{-3} for critical coupling (all of the data is summarized in table 1). MAFIA was then run for the coupled system for different iris widths giving the corresponding values of k. Fitting a line through these points on a log-log plot, figure 3, and extrapolating gives an expected iris width of 2.31 mm for critical coupling.

The second step in the experiment was to measure the test piece to determine both the coupling and the frequency split for a series of iris widths. From figure 3 one can see that the experimental values for k lie on a line parallel and slightly displaced from the line derived from MAFIA. Reflection measurements indicate that the iris width necessary for critical coupling is 2.66 mm, which is much larger than the expected value. This discrepency is easily explained by the fact that the Q's of the test piece are substantialy lower than the theoretical values (no special pains were taken to ensure a good surface finish and there are imperfect joints). In fact, the pillbox Q was measured to be a factor 4.2 lower than the theoretical value. If we assume that the effect on α_g and Q_g is similar, i.e. Q_g is a factor 4.2 smaller and α_g is a factor 4.2 larger, we find that a better estimate from equation 13 for the frequency split is k = 1.28×10^{-2}. This in turn implies a coupling iris 2.90 mm wide. The result is rather good, with an error in iris width of less than 9% and will be better for cavities with Q's closer to theoretical values. It emphasizes, however, that a good estimate or measurement is needed for the actual Q's of the cavities to be coupled. The small discrepancy between the calculated and measured values of k are indicative of another source of error. The systematic difference in k shown in figure 3 is probably due to a difference between the geometry of the MAFIA calculation and the test piece. This source of error can certainly be reduced by more careful use of MAFIA and more precise machining of the test piece.

MAFIA: $Q_{guide} = 4{,}800$
$Q_{cavity} = 5{,}200$

iris width (mm)	k
2.0	4.03×10^{-3}
2.5	7.86×10^{-3}
3.0	1.39×10^{-2}

Measurement: $Q_{cavity} = 1{,}230$

iris width (mm)	k	β
1.75	2.60×10^{-3}	29.0
2.50	8.64×10^{-3}	1.329
2.80	1.32×10^{-2}	0.848

$\lambda_{guide} = 14.1$ mm
$\alpha_{guide} = 7.316 \times 10^{-5}$ nepers/mm (theoretical)

Table 1. Summary of calculated and experimental data

References

[1] R. Klatt *et al.*, Proc. 1986 Linear Accelerator Conf., Stanford Linear Accelerator Center, Internal Report SLAC-303 (1986).

[2] T. F. Wang, R.K. Cooper, Los Alamos National Laboratory, Internal Report ATN-89-6 (1989).

[3] R. K. Cooper, K. C. D. Chan, T. F. Wang, L. E. Thode, "Transverse Effects of a Waveguide Coupling Slot", Los Alamos National Laboratory, Internal Report LA-UR-88-3251 (1988).

[4] H. A. Bethe, "Theory of Diffraction by a Small Hole," Phys. Rev. 66 (7-8) 163-182 (October 1 and 15, 1944).

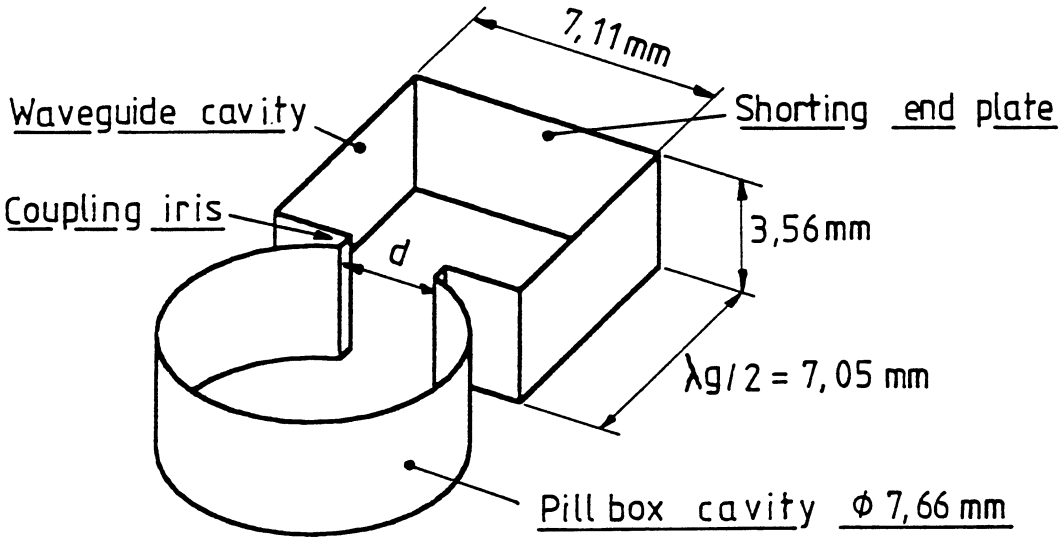

Figure 1. Coupled cavity geometry.

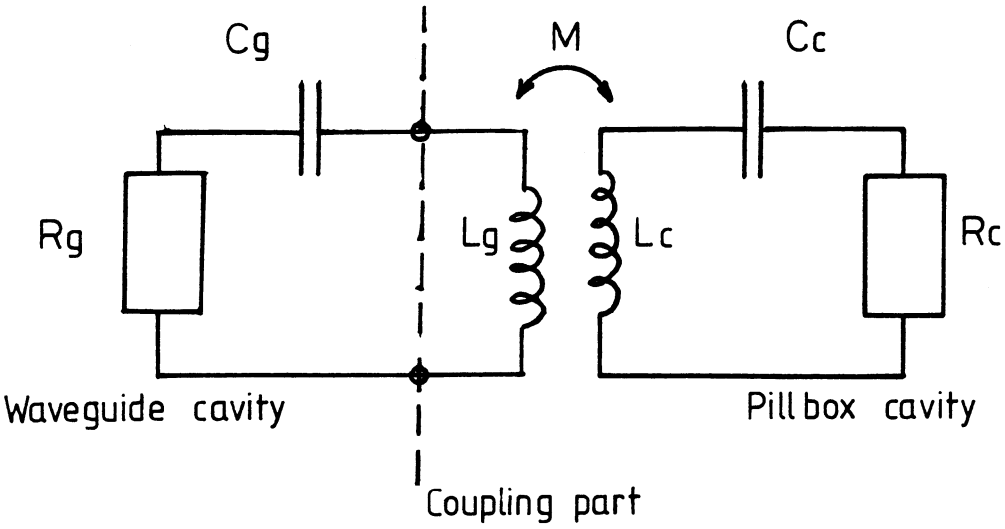

Figure 2a. Coupled cavity circuit.

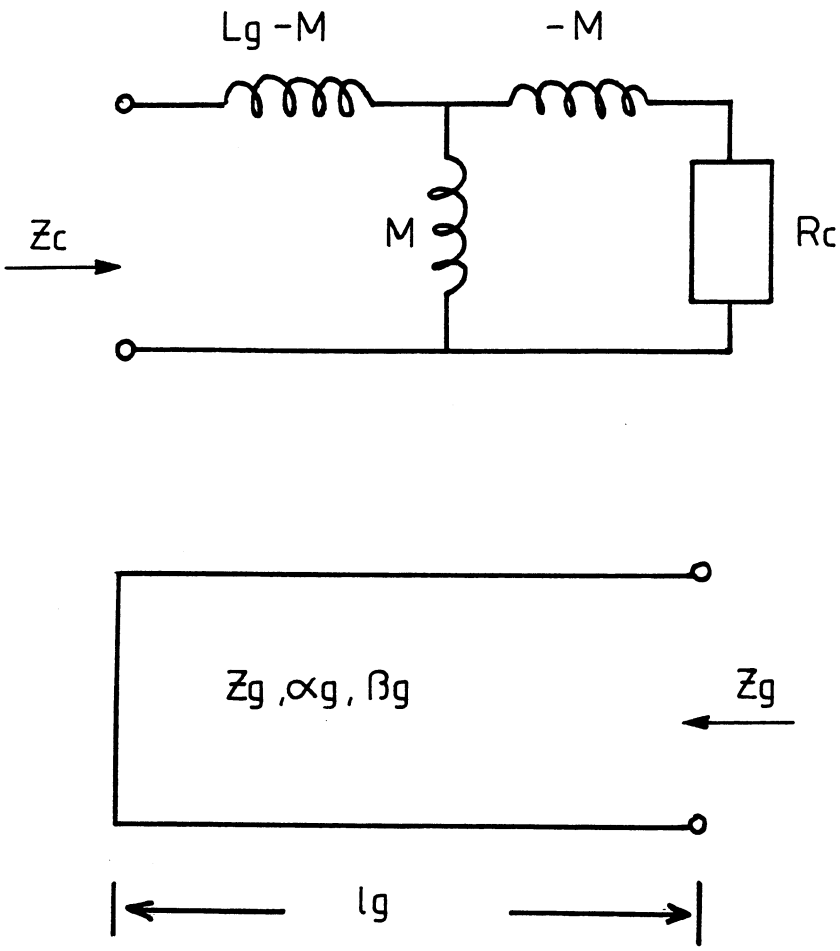

Figure 2b. Cavity with iris circuit and shorted waveguide circuit.

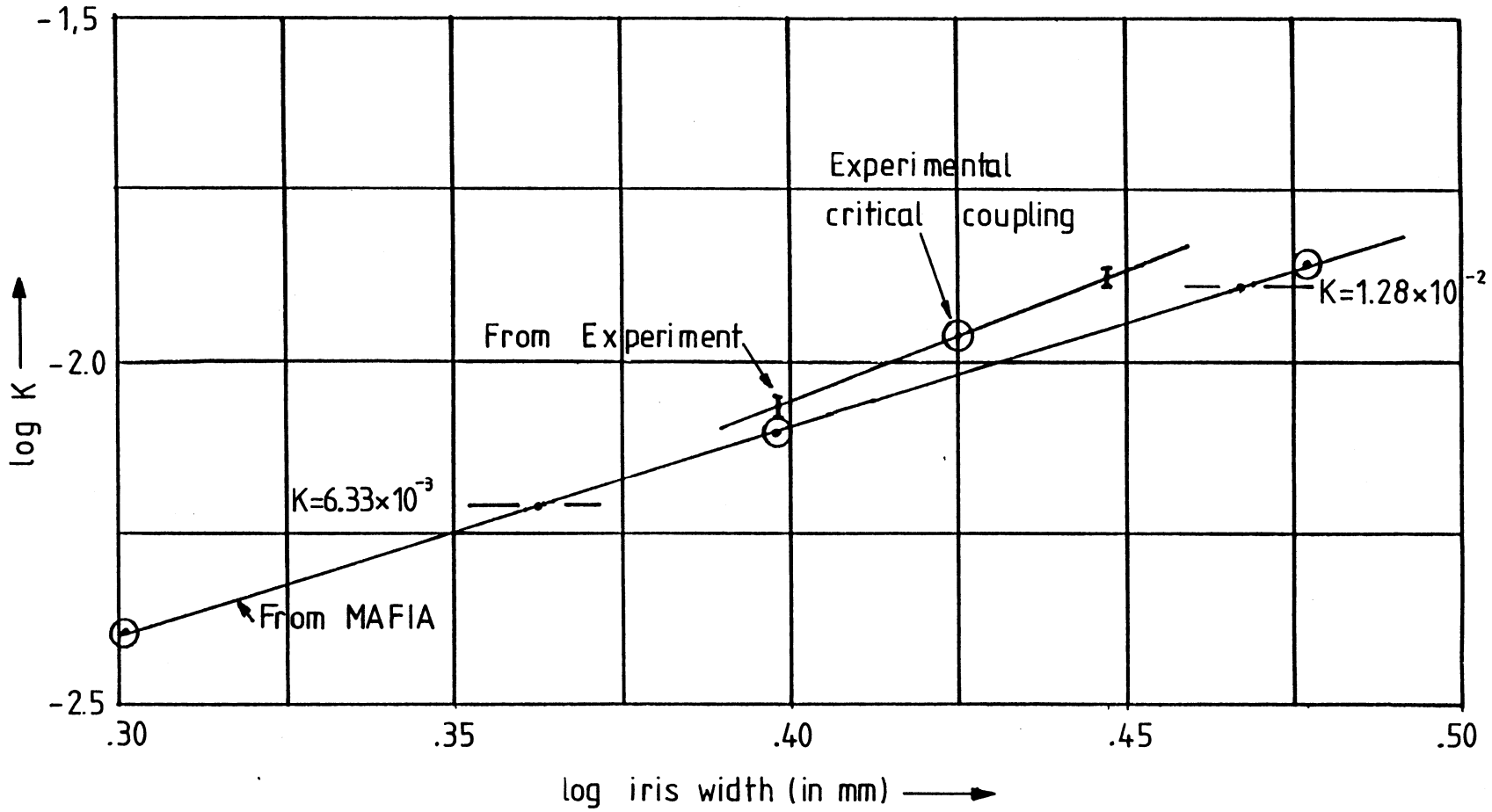

Figure 3. k as a function of iris width.